# OPERATOR'S MANUAL


# VARIABLE SPEED WOOD LATHE
# MODEL: WL-1840VS

Baileigh Industrial, Inc.
P.O. Box 531
Manitowoc, WI 54221-0531
Phone: 920.684.4990
Fax: 920.684.3944
sales@baileighindustrial.com



Rev. 10/2013

# Table of Contents

# THANK YOU & WARRANTY

Thank you for your purchase of a machine from Baileigh Industrial. We hope that you find it productive and useful to you for a long time to come.

**Inspection & Acceptance.** Buyer shall inspect all Goods within ten (10) days after receipt thereof. Buyer's payment shall constitute final acceptance of the Goods and shall act as a waiver of the Buyer's rights to inspect or reject the goods unless otherwise agreed. If Buyer rejects any merchandise, Buyer must first obtain a Returned Goods Authorization ("RGA") number before returning any goods to Seller. Goods returned without a RGA will be refused. Seller will not be responsible for any freight costs, damages to goods, or any other costs or liabilities pertaining to goods returned without a RGA. Seller shall have the right to substitute a conforming tender. Buyer will be responsible for all freight costs to and from Buyer and repackaging costs, if any, if Buyer refuses to accept shipment. If Goods are returned in unsalable condition, Buyer shall be responsible for full value of the Goods. Buyer may not return any special order Goods. Any Goods returned hereunder shall be subject to a restocking fee equal to 30% of the invoice price.

**Specifications.** Seller may, at its option, make changes in the designs, specifications or components of the Goods to improve the safety of such Goods, or if in Seller's judgment, such changes will be beneficial to their operation or use. Buyer may not make any changes in the specifications for the Goods unless Seller approves of such changes in writing, in which event Seller may impose additional charges to implement such changes.

**Limited Warranty.** Seller warrants to the original end-user that the Goods manufactured or provided by Seller under this Agreement shall be free of defects in material or workmanship for a period of twelve (12) months from the date of purchase, provided that the Goods are installed, used, and maintained in accordance with any instruction manual or technical guidelines provided by the Seller or supplied with the Goods, if applicable. The original end-user must give written notice to Seller of any suspected defect in the Goods prior to the expiration of the warranty period. The original end-user must also obtain a RGA from Seller prior to returning any Goods to Seller for warranty service under this paragraph. Seller will not accept any responsibility for Goods returned without a RGA. The original end-user shall be responsible for all costs and expenses associated with returning the Goods to Seller for warranty service. In the event of a defect, Seller, at its sole option, shall repair or replace the defective Goods or refund to the original end-user the purchase price for such defective Goods. Goods are not eligible for replacement or return after a period of 30 days from date of receipt. The foregoing warranty is Seller's sole obligation, and the original end-user's exclusive remedy, with regard to any defective Goods. This limited warranty does not apply to: (a) die sets, tooling, and saw blades; (b) periodic or routine maintenance and setup, (c) repair or replacement of the Goods due to normal wear and tear, (d) defects or damage to the Goods resulting from misuse, abuse, neglect, or accidents, (f) defects or damage to the Goods resulting from improper or unauthorized alterations, modifications, or changes; and (f) any Goods that has not been installed and/or maintained in accordance with the instruction manual or technical guidelines provided by Seller.

**EXCLUSION OF OTHER WARRANTIES.** THE FOREGOING LIMITED WARRANTY IS IN LIEU OF ALL OTHER WARRANTIES, EXPRESS OR IMPLIED. ANY AND ALL OTHER EXPRESS, STATUTORY OR IMPLIED WARRANTIES, INCLUDING BUT NOT LIMITED TO, ANY WARRANTY OF MERCHANTABILITY OR FITNESS FOR ANY PARTICULAR PURPOSE ARE EXPRESSLY DISCLAIMED. NO WARRANTY IS MADE WHICH EXTENDS BEYOND THAT WHICH IS EXPRESSLY CONTAINED HEREIN.

**Limitation of Liability.** IN NO EVENT SHALL SELLER BE LIABLE TO BUYER OR ANY OTHER PARTY FOR ANY INCIDENTIAL, CONSEQUENTIAL OR SPECIAL DAMAGES (INCLUDING, WITHOUT LIMITATION, LOST PROFITS OR DOWN TIME) ARISING FROM OR IN MANNER CONNECTED WITH THE GOODS, ANY BREACH BY SELLER OR ITS AGENTS OF THIS AGREEMENT, OR ANY OTHER CAUSE WHATSOEVER, WHETHER BASED ON CONTRACT, TORT OR ANY OTHER THEORY OF LIABILITY. BUYER'S REMEDY WITH RESPECT TO ANY CLAIM ARISING UNDER THIS AGREEMENT IS STRICTLY LIMITED TO NO MORE THAN THE AMOUNT PAID BY THE BUYER FOR THE GOODS.

**Force Majuere.** Seller shall not be responsible for any delay in the delivery of, or failure to deliver, Goods due to causes beyond Seller's reasonable control including, without limitation, acts of God, acts of war or terrorism, enemy actions, hostilities, strikes, labor difficulties, embargoes, non-delivery or late delivery of materials, parts and equipment or transportation delays not caused by the fault of Seller, delays caused by civil authorities, governmental regulations or orders, fire, lightening, natural disasters or any other cause beyond Seller's reasonable control. In the event of any such delay, performance will be postponed by such length of time as may be reasonably necessary to compensate for the delay.

**Installation.** If Buyer purchases any Goods that require installation, Buyer shall, at its expense, make all arrangements and connections necessary to install and operate the Goods. Buyer shall install the Goods in accordance with any Seller instructions and shall indemnify Seller against any and all damages, demands, suits, causes of action, claims and expenses (including actual attorneys' fees and costs) arising directly or indirectly out of Buyer's failure to properly install the Goods.

**Work By Others; Safety Devices.** Unless agreed to in writing by Seller, Seller has no responsibility for labor or work performed by Buyer or others, of any nature, relating to design, manufacture, fabrication, use, installation or provision of Goods. Buyer is solely responsible for furnishing, and requiring its employees and customers to use all safety devices, guards and safe operating procedures required by law and/or as set forth in manuals and instruction sheets furnished by Seller. Buyer is responsible for consulting all operator's manuals, ANSI or comparable safety standards, OSHA regulations and other sources of safety standards and regulations applicable to the use and operation of the Goods.

**Remedies.** Each of the rights and remedies of Seller under this Agreement is cumulative and in addition to any other or further remedies provided under this Agreement or at law or equity.

**Attorney's Fees.** In the event legal action is necessary to recover monies due from Buyer or to enforce any provision of this Agreement, Buyer shall be liable to Seller for all costs and expenses associated therewith, including Seller's actual attorneys' fees and costs.

**Governing Law/Venue.** This Agreement shall be construed and governed under the laws of the State of Wisconsin, without application of conflict of law principles. Each party agrees that all actions or proceedings arising out of or in connection with this Agreement shall be commenced, tried, and litigated only in the state courts sitting in Manitowoc County, Wisconsin or the U.S. Federal Court for the Eastern District of Wisconsin. Each party waives any right it may have to assert the doctrine of "forum non conveniens" or to object to venue to the extent that any proceeding is brought in accordance with this section. Each party consents to and waives any objection to the exercise of personal jurisdiction over it by courts described in this section. Each party waives to the fullest extent permitted by applicable law the right to a trial by jury.

**Summary of Return Policy.**

- 10 Day acceptance period from date of delivery. Damage claims and order discrepancies will not be accepted after this time.
- You must obtain a Baileigh issued RGA number PRIOR to returning any materials.
- Returned materials must be received at Baileigh in new condition and in original packaging.
- Altered items are not eligible for return.
- Buyer is responsible for all shipping charges.
- A 30% re-stocking fee applies to all returns.

Baileigh Industrial makes every effort to ensure that our posted specifications, images, pricing and product availability are as correct and timely as possible. We apologize for any discrepancies that may occur. Baileigh Industrial reserves the right to make any and all changes deemed necessary in the course of business including but not limited to pricing, product specifications, quantities, and product availability.

**For Customer Service & Technical Support:**
Please contact one of our knowledgeable Sales and Service team members at:
(920) 684-4990 or e-mail us at sales@baileighindustrial.com

## INTRODUCTION

*The quality and reliability of the components assembled on a Baileigh Industrial machine guarantee near perfect functioning, free from problems, even under the most demanding working conditions. However if a situation arises, refer to the manual first. If a solution cannot be found, contact the distributor where you purchased our product. Make sure you have the serial number and production year of the machine (stamped on the nameplate). For replacement parts refer to the assembly numbers on the parts list drawings.*

*Our technical staff will do their best to help you get your machine back in working order.*

**In this manual you will find: (when applicable)**

- Safety procedures
- Correct installation guidelines
- Description of the functional parts of the machine
- Capacity charts
- Set-up and start-up instructions
- Machine operation
- Scheduled maintenance
- Parts lists

## GENERAL NOTES

After receiving your equipment remove the protective container. Do a complete visual inspection, and if damage is noted, **photograph it for insurance claims** and contact your carrier at once, requesting inspection. Also contact Baileigh Industrial and inform them of the unexpected occurrence. Temporarily suspend installation.

Take necessary precautions while loading / unloading or moving the machine to avoid any injuries.

Your machine is designed and manufactured to work smoothly and efficiently. Following proper maintenance instructions will help ensure this. Try and use original spare parts, whenever possible, and most importantly; **DO NOT** overload the machine or make any unauthorized modifications.

***Note:*** *This symbol refers to useful information throughout the manual.*

# IMPORTANT

## PLEASE READ THIS OPERATORS MANUAL CAREFULLY

It contains important safety information, instructions, and necessary operating procedures. The continual observance of these procedures will help increase your production and extend the life of the equipment.

## SAFETY INSTRUCTIONS

### LEARN TO RECOGNIZE SAFETY INFORMATION

This is the safety alert symbol. When you see this symbol on your machine or in this manual, **BE ALERT TO THE POTENTIAL FOR PERSONAL INJURY!**

Follow recommended precautions and safe operating practices.

### UNDERSTAND SIGNAL WORDS

A signal word – **DANGER**, **WARNING**, or **CAUTION** is used with the safety alert symbol. **DANGER** identifies a hazard or unsafe practice that will result in severe **Injury or Death**.

Safety signs with signal word **DANGER** or **WARNING** are typically near specific hazards.

General precautions are listed on **CAUTION** safety signs. **CAUTION** also calls attention to safety messages in this manual.

DANGER

WARNING

CAUTION

**SAVE THESE INSTRUCTIONS.**
**Refer to them often and use them to instruct others.**

## PROTECT EYES

Wear safety glasses or suitable eye protection when working on or around machinery.

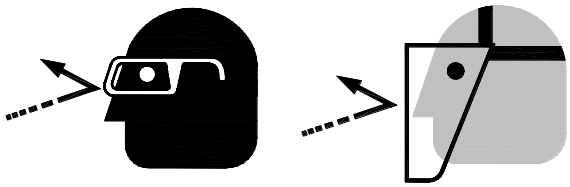

## DUST HAZARD

Wear appropriate dust mask. Dust created while using machinery can cause cancer, birth defects, and long term respiratory damage. Be aware of the dust hazards associated with all types of materials.

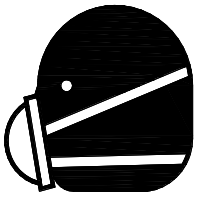

## ROTATING CHUCK CAN CUT, DISMEMBER, SNAG, and ENTRAP

Keep hands and body clear while operating. Flying chips, splinters, and other particles can cause serious injury or death.

## PROTECT AGAINST NOISE

Prolonged exposure to loud noise can cause impairment or loss of hearing. Wear suitable hearing protective devices such as ear muffs or earplugs to protect against objectionable or uncomfortable loud noises.

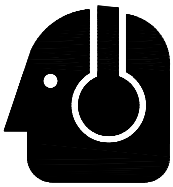

## HIGH VOLTAGE

**USE CAUTION IN HIGH VOLTAGE AREAS. DO NOT** assume the power to be off.
**(FOLLOW PROPER LOCKOUT PROCEDURES)**

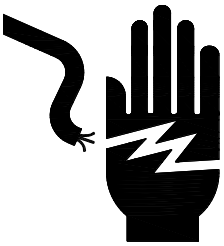

## SAFETY PRECAUTIONS

Wood working can be dangerous if safe and proper operating procedures are not followed. As with all machinery, there are certain hazards involved with the operation of the product. Using the machine with respect and caution will considerably lessen the possibility of personal injury. However, if normal safety precautions are overlooked or ignored, personal injury to the operator may result.

Safety equipment such as guards, push sticks, hold-downs, feather boards, goggles, dust masks and hearing protection can reduce your potential for injury. But even the best guard won't make up for poor judgment, carelessness or inattention. Always use common sense and exercise caution in the workshop. If a procedure feels dangerous, don't try it.

**REMEMBER:** Your personal safety is your responsibility.

**WARNING: FAILURE TO FOLLOW THESE RULES MAY RESULT IN SERIOUS PERSONAL INJURY**

1. **FOR YOUR OWN SAFETY, READ INSTRUCTION MANUAL BEFORE OPERATING THE MACHINE.** Learn the machine's application and limitations as well as the specific hazards.
2. **Only trained and qualified personnel should operate this machine.**
3. **Make Sure** lathe is located on a flat stable surface.
4. **Make sure guards are in place and in proper working order before operating machinery.**
5. **Face / Eye Protection.** Always wear a face shield to protect from flying debris while the machine is running.
6. **Stopping the Lathe. DO NOT** try and stop the lathe by using your hand against the piece part. **Always** allow the lathe to stop on its own.
7. **Respiratory Protection.** Wear an approved dust mask or respirator while using this machine. Continued exposure to wood dust can cause allergies or long term respiratory problems.
8. **Mounting Piece Part.** Before starting the machine, make sure the piece part has been properly secured to the headstock and tailstock of the lathe. **Check** for adequate clearance as the piece rotates.
9. **Adjusting Tool Rest.** Adjust the tool rest to provide for proper support of the tool you will be using. Test clearance of the tool rest by rotating the piece part by hand before turning the lathe **ON**.
10. **Remove any adjusting tools.** Before operating the machine, make sure any adjusting tools have been removed.

## SAFETY PRECAUTIONS (cont.)

11. **Sanding Polishing.** Remove the tool rest before performing polishing or sanding operations.
12. **Keep work area clean.** Cluttered areas invite injuries.
13. **Overloading machine.** By overloading the machine you may cause injury from flying parts. **DO NOT** exceed the specified machine capacities.
14. **Material Removal Rate.** Attempting to remove too much material at once can cause the piece part to fly out of the lathe causing **severe bodily injury.**
15. **Dress appropriate. DO NOT** wear loose fitting clothing or jewelry as they can be caught in moving machine parts. Protective clothing and steel toe shoes are recommended when using machinery. Wear a restrictive hair covering to contain long hair.
16. **Use eye and ear protection**. Always wear ISO approved impact safety goggles
17. **Turning Speed.** Select the correct turning speed for your work. Always allow the lathe to reach full speed before beginning an operation.
18. **Use Sharp Tooling.** Keep chisels and other tooling properly sharpened and held firmly while turning.
19. **Do not overreach**. Maintain proper footing and balance at all times. **DO NOT** reach over or across a running machine.
20. **Stay alert**. Watch what you are doing and use common sense. **DO NOT** operate any tool or machine when you are tired.
21. **Maintenance and Adjustments.** Before starting any inspection, adjustment, or maintenance procedure **MAKE SURE** the lathe is **OFF**, has come to a complete stop, and the electrical has been properly **LOCKED OUT**.
22. **Check for damaged parts**. Before using any tool or machine, carefully check any part that appears damaged. Check for binding of moving parts that may affect proper machine operation.
23. **Reducing Piece Part Vibration.** If the piece part vibrates while turning, immediately turn the lathe **OFF**. Check that the piece part is properly centered and balanced. Trim off excess waste to help balance the piece. **Make Sure** piece part is secured.
24. **Observe work area conditions**. **DO NOT** use machines or power tools in damp or wet locations. Do not expose to rain. Keep work area well lighted. **DO NOT** use electrically powered tools in the presence of flammable gases or liquids.
25. **DO NOT** bypass or defeat any safety interlock systems.
26. Keep visitors a safe distance from the work area.

## SAFETY PRECAUTIONS (cont.)

27. **Keep children away**. Children must never be allowed in the work area. **DO NOT** let them handle machines, tools, or extension cords.
28. Know the location of the **ON - OFF** switch and the **"E"- STOP** button.
29. **DO NOT operate machine if under the influence of alcohol or drugs**. Read warning labels on prescriptions. If there is any doubt, **DO NOT** operate the machine.
30. **DO NOT** touch live electrical components or parts.
31. **Be Sure** all equipment is properly installed and grounded according to national, state, and local codes. If machine is equipped with a three-prong plug, it should be plugged into a three-hole electrical receptacle. If an adapter is used to accommodate a two-prong receptacle, the adapter plug must be attached to a known ground. Never remove the third prong.
32. Inspect power and control cables periodically. Replace if damaged or bare wires are exposed. **Bare wiring can kill!**
33. **Faceplate Turning.** When faceplate turning, use the lathe chisels on the downward spinning side of the piece part **ONLY.**
34. **Maintain machine in top condition**. Keep clean for best and safest performance. Follow instructions for lubricating and changing accessories.
35. **Reduce the risk of unintentional starting**. Make sure switch is in **"OFF"** position before plugging in power cord.
36. **Never leave machine running unattended. TURN POWER OFF**. Don't leave machine until it comes to a complete stop.
37. **Make sure machine is disconnected from power supply** while motor is being mounted, connected or reconnected.
38. **Inspect Piece Part.** Always inspect piece part for staples, nails, knots, or other imperfections that could become projectiles causing personal injury. Carefully Inspect piece parts that have been glued for a good bond.
39. **Warning**: The dust generated by certain woods and wood products can be injurious to your health. Always operate machinery in well ventilated areas and provide for proper dust removal. Use a wood dust collection system whenever possible.

### EMERGENCY STOP

In the event of incorrect operation or dangerous conditions, the machine can be stopped immediately by pressing the **STOP** switch. Twist the stop switch cap 1/4 turn clockwise to reset the stop switch. Resetting the stop switch will not start the machine.

## SPECIFICATIONS

| | |
|---|---|
| Swing Over Bed, Inboard | 18” (460mm) |
| Swing Over Bed, Outboard | 35” (889mm) |
| Variable Speed Range 1 (RPM) | 50-1200 |
| Variable Speed Range 2 (RPM) | 150-3200 |
| Spindle | 1-1/4”, 8TPI, RH thread |
| Headstock Spindle Taper | MT2 |
| Headstock Bore | 19/32" (15mm) |
| Index Increment | 10° |
| Tailstock Spindle Taper | MT2 |
| Tailstock Bore | 25/64” (10mm) |
| Inboard Face Plate Diameter | 6” (152mm) |
| Outboard Face Plate Diameter | 6” (152mm) |
| Tool Rest | 12” (305mm) |
| Distance From Floor to Spindle Centerline | 43-1/2” (1105mm) |
| Maximum Distance Between Centers | 42” (1067mm) |
| Maximum Distance Between Centers with bed extension | 57” (1448mm) |
| Tailstock Quill Travel | 4-1/4” (108mm) |
| Footprint of Stand | 69” x 19” (1753 x 483mm) |
| Power | 220VAC 3Ph |
| Motor | 2HP, 3Ph, 6 amp, 220V |
| Net Weight | 518 lbs. (235kgs) |

## TECHNICAL SUPPORT

Our technical support department can be reached at 920.684.4990, and asking for the support desk for purchased machines. Tech Support handles questions on machine setup, schematics, warranty issues, and individual parts needs: (other than die sets and blades).
For specific application needs or future machine purchases contact the Sales Department at: sales@baileighindustrial.com, Phone: 920.684.4990, or Fax: 920.684.3944.

***Note**: The photos illustrations using in this manual are representative only and may not depict the actual color, labeling or accessories and may be intended to illustrate technique only.*

***Note:** The specifications and dimensions presented here are subject to change without prior notice due to improvements of our products.*

## UNPACKING

Remove lathe from the shipping cartons. Check for damage and ensure all parts are intact. Any damage should be reported immediately to your distributor and shipping agent. Before assembling, read the manual thoroughly, familiarizing yourself with correct assembly and maintenance procedures and proper safety precautions.

Contents of shipping cartons:

Figure 1
1. Tool Rest, 12” (305mm)
2. Leveling Pads and Bolts
3. Knockout Rod
4. Motor Tension Rod

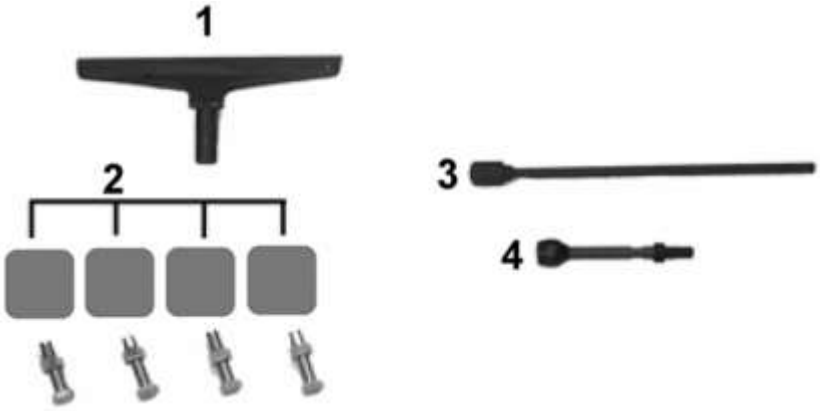


Fig 1

Figure 2 (Optional)
1. Outboard Tool Rest Holder
2. Bed Extension
3. Guard
4. Comparator Centers (optional)
5. Comparator/Guard Support Bracket
6. Comparator/Guard Brackets

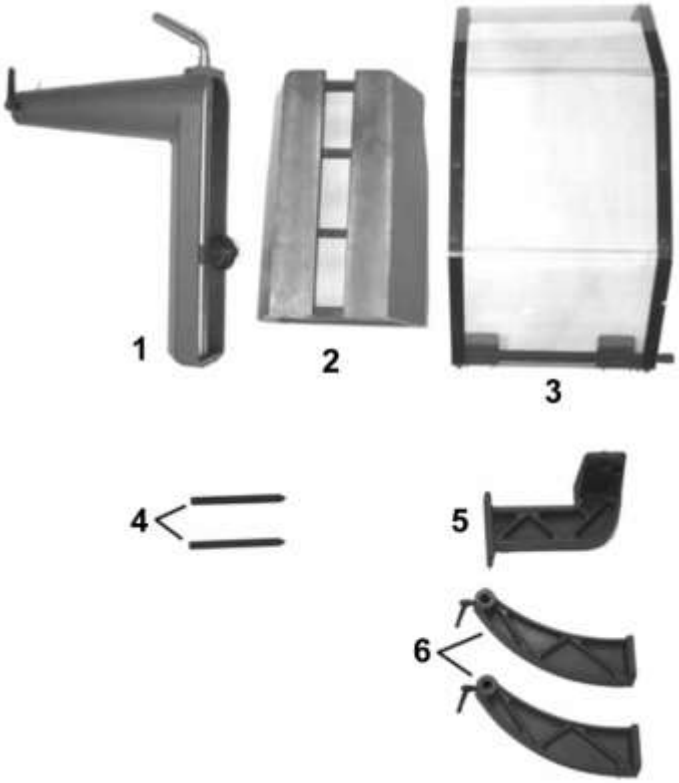


Fig 2

## ASSEMBLY

**WARNING: For your own safety, DO NOT connect the machine to the power source until the machine is completely assembled and you read and understand the entire instruction manual.**

Refer to the exploded view parts illustrations at the back of the manual as needed to assist in the assembly of this machine.

1. Install the motor tension rod. Once threaded in, lock into place with the jam nut.
2. The inboard tool rest can now be installed in its holder. Once set in place lock it using the handle.


Fig 3

## Cleaning

Your machine may be shipped with a rustproof waxy oil coating and grease on the exposed unpainted metal surfaces. To remove this protective coating, use a degreaser or solvent cleaner. For a more thorough cleaning, some parts will occasionally have to be removed. **DO NOT USE** acetone or brake cleaner as they may damage painted surfaces.
Follow manufacturer's label instructions when using any type of cleaning product. After cleaning, wipe unpainted metal surfaces with a light coating of quality oil or grease for protection.

**WARNING: DO NOT USE gasoline or other petroleum products to clean the machine. They have low flash points and can explode or cause fire.**

**CAUTION: When using cleaning solvents work in a well-ventilated area. Many cleaning solvents are toxic if inhaled.**


## INSTALLATION

### IMPORTANT:

Consider the following when looking for a suitable location to place the machine:

- Overall weight of the machine.
- Weight of material being processed.
- Sizes of material to be processed through the machine.
- Space needed for auxiliary stands, work tables, or other machinery.
- Clearance from walls and other obstacles.
- Maintain an adequate working area around the machine for safety.
- Have the work area well illuminated with proper lighting.
- Keep the floor free of oil and make sure it is not slippery.
- Remove scrap and waste materials regularly, and make sure the work area is free from obstructing objects.
- If long lengths of material are to be fed into the machine, make sure that they are safely supported and will not extend into any aisles.

The lathe can be lifted off the skid from overhead using slings ran under the lathe bed.

### Securing the Base

**WARNING: Before operating; make sure it is positioned firmly on a solid level floor. If it tips over on you, it could cause severe injury or death.**

The machine should be sited on a level, concrete floor. The accuracy of any machine depends on the precise placement of it to the mounting surface.
Place shims under the four feet mounted in the base as required for leveling.

The lathe must be positioned on a smooth, level surface. Install the leveling bolts and pads (Figure 4) under the four corners of the lathe.

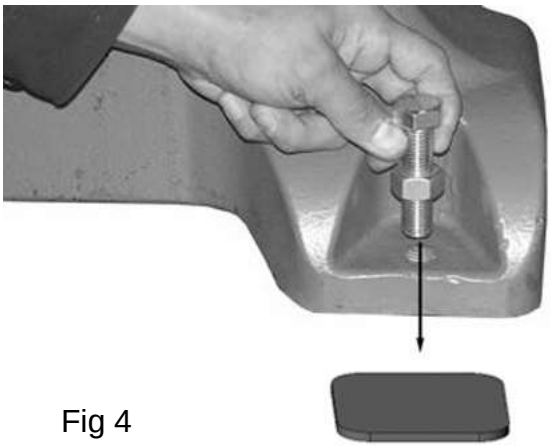

Fig 4

## ELECTRICAL

**CAUTION: HAVE ELECTRICAL UTILITIES CONNECTED TO MACHINE BY A CERTIFIED ELECTRICIAN!**
**Check if the available power supply is the same as listed on the machine nameplate.**

**WARNING: Make sure the grounding wire (green) is properly connected to avoid electric shock. DO NOT switch the position of the green grounding wire if any electrical plug wires are switched during hookup.**

### Connections

- A separate electrical circuit should be used for your tools. If an extension cord is used, use only 3-wire extension cords, which have grounding type plugs and receptacles, which accept the tool's plug. Before connecting the motor to the power line, make sure the switch is in the "OFF" position and be sure that the electric current is of the same characteristics as indicated on the tool.
- All line connections should make good contact. Running on low voltage will damage the motor.
- In the event of a malfunction or breakdown, grounding provides a path of least resistance for electric current to reduce the risk of electric shock. This tool is equipped with an electric cord having an equipment-grounding conductor and a grounding plug. The plug must be plugged into a matching outlet that is properly installed and grounded in accordance with all local codes and ordinances.
- Do not modify the plug provided - if it will not fit the outlet, have the proper outlet installed by a qualified electrician.

**WARNING: In all cases, make certain the receptacle in question is properly grounded. if you are not sure, have a qualified electrician check the receptacle.**

- Improper connection of the equipment-grounding conductor can result in risk of electric shock. The conductor with insulation having an outer surface that is green with or without yellow stripes is the equipment-grounding conductor. If repair or replacement of the electric cord or plug is necessary, do not connect the equipment-grounding conductor to a live terminal.
- Check with a qualified electrician or service personnel if the grounding instructions are not completely understood, or if in doubt as to whether the tool is properly grounded.

- Use only 3-wire extension cords that have grounding type plugs and receptacles that accept the tool's plug.
- Repair or replace damaged or worn cord immediately.

**Extension Cord Safety**

Extension cord should be in good condition and meet the minimum wire gauge requirements listed below:

| | LENGTH | | |
|---|---|---|---|
| AMP RATING | 25ft | 50ft | 100ft |
| 0-6 | 16 | 16 | 16 |
| 7-10 | 16 | 16 | 14 |
| 11-12 | 16 | 16 | 14 |
| 13-16 | 14 | 12 | 12 |
| 17-20 | 12 | 12 | 10 |
| 21-30 | 10 | 10 | No |
| | WIRE GAUGE | | |

An undersized cord decreases line voltage, causing loss of power and overheating. All cords should use a ground wire and plug pin. Replace any damaged cords immediately.

## Adjustments

### Tailstock

Depending on the length of your work piece, the tailstock can be moved accordingly. Simply push or pull handle (A) to loosen and allow the tailstock to slide to the correct position.
Once in position lock it into place with handle (A). Fine adjustment can be achieved by turning the handwheel (B) to lengthen or shorten the tailstock spindle.

### Cam Adjustments

If the tool rest or the tailstock does not tighten to the lathe bed when the locking handle is engaged, it may be necessary to tighten the locknut located under the bed centered below the rest. The adjustment is the same for both components.

### Tool Supports

The tool rest (C) can be adjusted for height, position on the bed, and angle to the work piece. Loosen the lock handle (D) to slide the rest forward or back as well as to angle it with respect to the bed. Once set to the desired position use the handle (D) again to lock it into place before using the lathe.
Loosen the handle (E) to adjust the height and angle of the tool rest itself. Once set, lock it into place before using the lathe. Note that the smaller handle is a ratchet type handle and can be positioned so that it is out of the way when working.
Additionally, there is another hole on the opposite side in which the smaller handle can be inserted if desired.

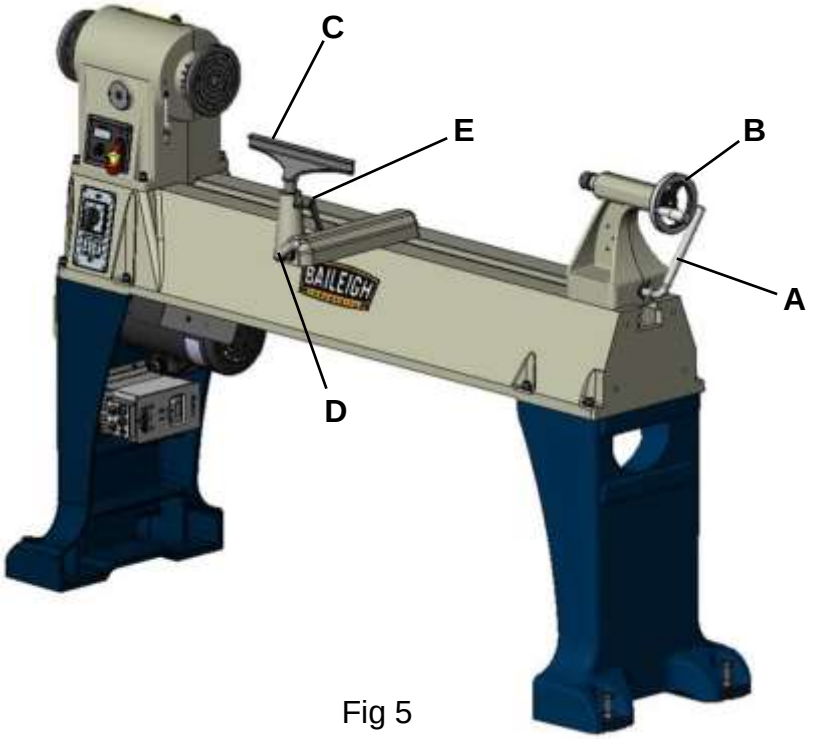


Fig 5

## CENTERS – INSTALLATION AND REMOVAL

### Headstock

**CAUTION: Do not drive the workpiece into the spur center while it is in the headstock or bearing failure will occur.**

1. To install a spur center in the headstock the center should first be mounted to your workpiece (see under “Operation” for more details) and both should be inserted into the headstock at the same time. Make sure both the spur center shaft and the headstock spindle mating surfaces are clean and free of debris.
2. To remove the spur center, first remove the workpiece from the lathe, insert the knockout rod through the hole in the outboard spindle then firmly tap the end of the spur center shaft.

***Note:*** *Make sure to hold onto the spur center while knocking it out so as to prevent it from falling on the floor and becoming damaged.*

### Tailstock

To remove the live center from the tailstock simply turn the handwheel in order to retract the tailstock spindle into the body.

## FACE PLATES – REMOVAL AND INSTALLATION

### Inboard

1. To remove the face plate first loosen the two set screws. Insert the indexing pin into one of the three holes and screw it in until it fully engages one of the indexing holes in the spindle. You may have to turn the face plate by hand until you can feel the pin engage the hole. The spindle should now be locked. The face plate can now be unscrewed counterclockwise off the spindle. If more leverage is needed insert the knock out rod into one of the holes.
2. Use the reverse procedure to install the face plate back onto the spindle.

***Note:*** *Do not use the knock out rod to tighten the face plate or thread damage can occur. Hand tighten only.*

## HI/LO RANGE BELT CHANGE

Moving the position of the poly-v belt to the other step on the motor sheave and the idler sheave changes the Hi or Low speed range.

1. Remove the access panel located under the outboard face plate. Loosen the three screws just enough so that the panel can slide free.
2. Loosen the motor lock handle and lift up the motor using the lift handle. Once it is up all the way, tighten into place with lock handle.
3. The motor pulley and the idler pulley are both visible once the headstock door is opened. At this point simply move the poly-v belt to the desired step on each pulley. The belt must be on the same set of grooves on the pulleys Do Not run the belt at an angle.
4. Tension the belt making sure that the grooves of the belts are seated properly and aligned with the corresponding grooves of both pulleys. Use only light pressure on the motor tension rod and then lock into place with motor lock handle.

## CONTROLS

1. **Start / Stop Paddle Switch**: Insert the yellow safety lockout key and lift up on the paddle to start the lathe. Push down on the paddle to stop the lathe. If leaving the lathe unattended, remove the yellow safety lockout key to prevent unauthorized usage. Store the lockout key in a safe location for authorized persons only.
2. **RPM Indicator**: Displays the current spindle speed.
3. **Speed Control**: Spindle RPM's are controlled with this control. To change the speed, rotate the control until the desired speed is displayed on the indicator.

   ***Important: Only change the speed when the motor is running or damage may occur.***

4. **Reversing Switch**: The reversing switch can be used to change the spindle rotation.

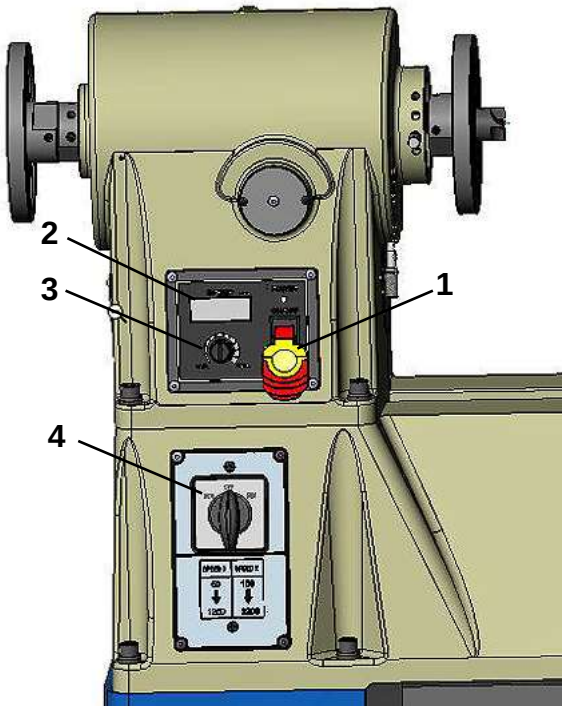

Fig 6

***Important: Allow the motor to come to a complete stop before reversing direction or damage may occur.***

## INDEXING

The indexer makes it possible to cut evenly spaced features in a workpiece while keeping the lathe headstock spindle locked. For example, when cutting flutes on a spindle blank with a router, while the spindle blank is secured within the lathe centers.
There are 12 holes in the spindle collar spaced 30° apart, and 4 holes in the headstock casting which accept the index pin. The combination of these holes will allow you to mark your workpiece for evenly spaced features.

1. To use the indexer, thread the index pin into one of the four holes until the index pin engages the spindle and prevents it from turning. This will be your first indexing position.
2. Unscrew and remove the index pin, and look down the hole, carefully counting the number of holes as you rotate the spindle. Continue to rotate the spindle until you reach the hole needed for your second flute cutting, and then re-insert the index pin.
3. Refer to the Indexing Chart to determine which holes to place the index in relative to the number of flutes desired in your workpiece.

## Using the Chart

Points, A, B, C, and D are the holes in the head casting.
The holes in the spindle collar may be considered as numbered 1 through 12.
**Example**: You wish to rout 3 flutes on your spindle blank.
Locate the “3” in the “No. of Flutes” column; each flute angle will be 135°.
The index pin should first be inserted into hole combination “A-1”. Make your first flute at this position. Remove the index pin and rotate the spindle so the number 5 hole is aligned with the ‘D’ and re-insert the pin. Finally back off the index pin and rotate the spindle until the index pin can be inserted into hole combination “D-8”.

| No. of Flutes = 360° divided by | Angle | Letter # | Letter # |
|---|---|---|---|
| 1 | 360 | A1 | |
| 2 | 180 | A1, A7 | |
| 3 | 135 | A1 | D5, D8 |
| 4 | 120 | A1, A5, A9 | |
| 5 | 90 | A1, A4, A7, A10 | |
| 6 | 60 | A1, A3, A5, A7, A9, A11 | |
| 7 | 45 | A1 | D2, D11 |
| 8 | 40 | A1 | C1 |
| 9 | 30 | A1 To 12 | |
| 10 | 20 | A1 | B1 |
| 11 | 15 | A1 | D1, D12 |
| 12 | 10 | A1 | B2 or C2 |

## RECOMMENDED LATHE SPEEDS

| Diameter of Work | Roughing RPM | General Cutting RPM | Finishing RPM |
|---|---|---|---|
| Under 2" | 1520 | 3000 | 3000 |
| 2" to 4" | 760 | 1600 | 2480 |
| 6" to 8" | 510 | 1080 | 1650 |
| 8" to 10" | 380 | 810 | 1240 |
| 10" to 12" | 300 | 650 | 1000 |
| 12" to 14" | 255 | 540 | 830 |
| 14" to 16" | 220 | 460 | 710 |
| 16" to 20" | 190 | 400 | 620 |

## OPERATION

The following directions will give the inexperienced operator a beginning point for common lathe operations. Practice on scrap material before attempting serious work.

**CAUTION: Always wear proper personal protection equipment, including but not limited to, safety eye protection with side shields, face shield, safety footwear, and leather gloves to protect from, chips, dust, burrs, and slivers.**

### LATHE TOOLS

Standard wood turning tools come in several different configurations (Fig. 7). The majority of turnings will require the gouge tool (A) Fig. 7. This round nosed hollow chisel is used for roughing cuts, cove cuts and other operations. The skew chisel (B) is a double-ground flat chisel, with an angled end. This tool is used for smoothing cylinders, for cutting shoulders, beads, vee grooves, etc. The parting tool (C) is a double-ground chisel, used for cutting-off, or for making straight incisions or sizing cuts to any required diameter. The round nose scraper (D) is used for mostly hollowing work, while the square-end scraper is mainly used for the outside of bowls.

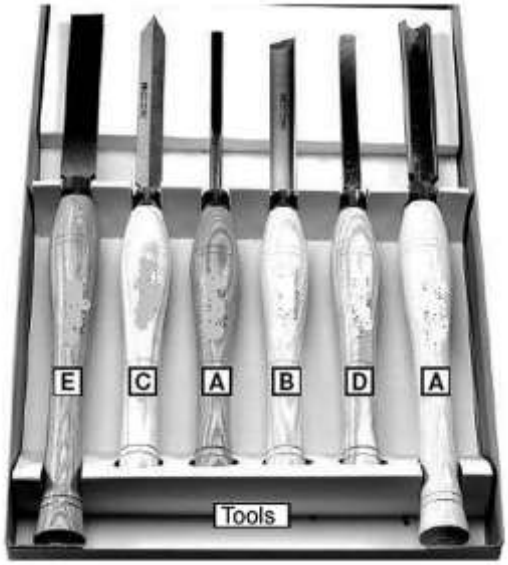


Fig 7

### HOW TO TURN SPINDLES

Working with any material that is attached to the lathe centers is called a spindle turning. This is the principal type of wood turning (chair and table legs, lamp stems, etc.) The turning of spindles can be done with either a scraping or cutting technique.
The cutting technique, by virtue of faster wood removal and a cleaner surface, is the preferred method.

## CENTERING THE WORK

Wood stock for any spindle turning should be approximately square, and the ends should be square with the sides. Two common methods of determining the center are shown in Figs. 8 and 9.
In Fig. 8, a distance a little more or a little less than one-half the width of the stock is set off from each of the four sides. The small square set off in the center can then be used in marking the true center.

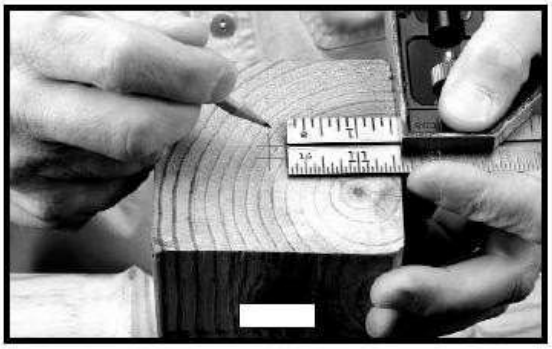

Fig 8

The diagonal method, Fig. 9, consists of drawing lines from corner to corner, with the intersection marking the center of the work.

Fig 9

After marking each end, mark the true center with a punch awl or dividers (Fig. 10). If the stock is hardwood, the centers should be drilled to a depth of about 1/8”.

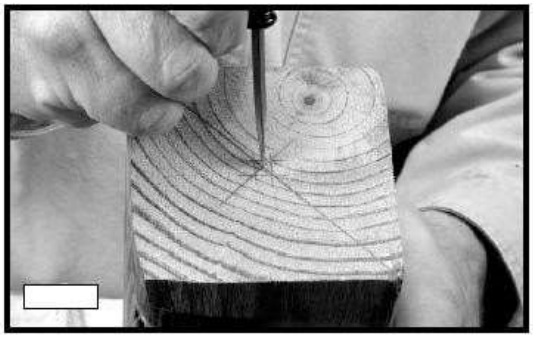

Fig 10

The spur or live center is then placed against one end of the work and seated by striking with a mallet (Fig. 11). In hardwood, make a starting seat for the spur center by sawing on the diagonal lines, and drilling a small hole at the intersection. After driving the center, hold the center and the work together and fit both immediately to headstock spindle. If you are not using a ball bearing center, the end of work at tailstock center should be oiled. Place the lubricant on the wood either before or after it is put on the lathe. Many turners use beeswax, tallow, or a wax-and-oil mixture as a lubricant.

Fig 11

A ball bearing center is ideal because it eliminates lubricating. If the work is to be removed from the lathe before completion, an index mark should be made as a guide for re-centering (Fig. 12). A permanent indexer can be made by grinding off one corner of one of the spurs.

Fig 12

## TOOL REST POSITION

Mount the tool rest in place about 1/8” away from the work and 1/8” above the work centerline (Fig. 13). This position may be varied to suit the work and the operator. Place a guide mark on the tool rest shank as an aid to quick and accurate resetting.

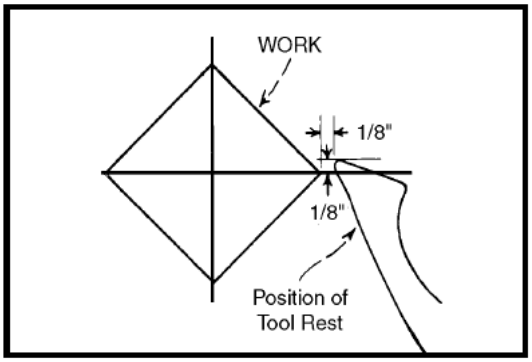


Fig 13

## ROUGHING A CYLINDER

The large gouge is used in the first turning operation by smoothing the sharp corners of the work. Run the lathe at low speed and hold the gouge in the manner shown in Fig. 14.
The cut starts about 2 inches from the tailstock end and continues from this point to the end of the tailstock. Make the second pass beginning about 2” or 3” to the left of the first cut. Advance again toward the tailstock, and merge with the previous cut.

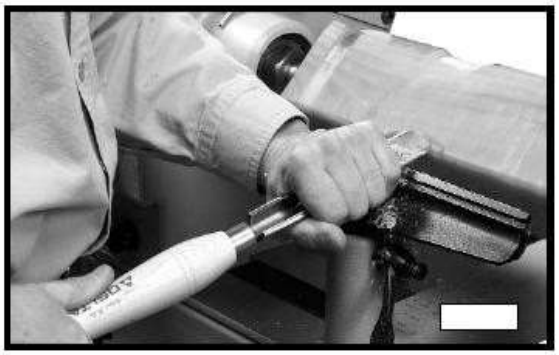

Fig 14

Toward the end of the live center, roll the gouge in the opposite direction (Fig. 15) to carry the final cut off the live center end of the work. The roughing cut should not be carried out with one continuous movement, because this would tear long slivers from the corners of the work. Neither should the cut be started directly at the end of the stock for the same reason. The cut can be safely carried from the center of the stock toward and off either end once the first roughing cuts have been made. The position of the gouge involves two or three important angles.

Fig 15

1. The tool may be advanced along the work either from right to left or from left to right. Left to right (from headstock to tailstock) is preferred since this action throws chips clear of the operator.
2. The gouge is rolled over slightly in the same direction it is advancing.
3. The tool is held well up on the work, with the bevel or grind tangent to the revolving surface (Fig. 19). This position will give a clean shearing cut. When pushed straight into the work (Fig. 16), the gouge has a scraping action, (normally a poor practice in spindle turning). The roughing cut is continued until the work approaches 1/8” of the required diameter. Once a cylindrical form has been obtained, the turning speed can be moved to the second or third speed setting.

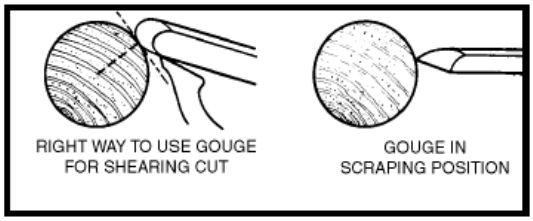


Fig 16

***Note**: Continue to move the tool rest inward toward the work piece to keep the safe distance between the two.*

## POSITION OF HANDS

While turning, the hand that holds the tool handle should be in a natural position. This hand provides the leverage for the tool by either moving in toward the chisel or moving out. The position of the tool rest hand is more a matter of individual preference, rather than a "set" or "proper" position. However, a palm-up grip (Fig. 17) is generally considered best. In this position, the first finger acts as a guide, sliding along the tool rest as the cut is made.

Fig 17

The alternate position is a palm-down grip (Fig. 18). In this position, the heel of the hand or the little finger serves as a guide. The palm-down position is solid and positive – excellent for roughing or heavy cutting. Most beginners start with the palm-down grip, switching later to the palm-up position for better manipulation of the chisel.

Fig 18

## SMOOTHING A CYLINDER

To smooth a cylinder, use a large skew chisel. This requires practice, but experience with this tool is very important. Place the cutting point near the center of chisel and high on the work (Fig. 19). Sometimes, in striving for a certain position in relation to the work, the beginner will often overlook this all-important point. Raising the handle will increase the depth of cut while lowering the handle, of course, does the opposite. As with the gouge, the skew can be advanced in either direction. The center of the skew toward the heel does the actual cutting. The back portion of the grind or bevel supports the tool, while the handle-hand controls the depth of cut by rocking the chisel on this pivot point. Because of this, keep the skew bevel perfectly flat.

Fig 19

## MAINTENANCE

**WARNING: Make sure the electrical disconnect is OFF before working on the machine.**
**Maintenance should be performed on a regular basis by qualified personnel.**
**Always follow proper safety precautions when working on or around any machinery.**

Maintenance on your lathe should be done at periodic intervals to ensure that the machine is in good working order. Inspection and maintenance should be performed at least twice a year but more often if the lathe receives constant use.

- Check daily for any unsafe conditions and fix immediately.
- Check that all nuts and bolts are properly tightened.
- On a weekly basis clean the machine and the area around it.
- Lubricate threaded components and sliding devices.
- Apply rust inhibitive lubricant to all non-painted surfaces.

***Note**: Proper maintenance can increase the life expectancy of your machine.*

1. Check all fasteners to make sure they are tight and check all adjustments that they are in order.
2. Clean and oil the lathe beds so that the headstock, tailstock and tool support base will slide easily. Clean any rust spots that may develop on the bed with a commercial rust remover.
3. Use compressed air to blow out the interior of the headstock in order to keep chips and sawdust from accumulating on the belts and pulleys.
4. Clean out the morse tapers on both the headstock and tailstock. Commercially available cleaners may be acquired form local tool stores.
5. Check the drive belt for tightness. It should be snug but not overly tight.
6. Use a mill file to remove any nicks or dings from the tool rests.
7. Clean and lubricate the tailstock ram and locking mechanism.

## TROUBLESHOOTING

**WARNING: Make sure the electrical disconnect is OFF before working on the machine.**

| Trouble | Probable Cause | Remedy |
|---|---|---|
| Motor fails to develop full power | Power line overload | Correct overload condition |
| | Undersize wires in power supply | Increase supply wire size |
| | Worn motor | Replace motor |
| Motor or spindle stalls or will not start | Excessive cut | Reduce depth of cut |
| | Improper belt adjustment, or worn or broken belt | Adjust or replace belt as needed |
| | Improper cooling of motor | Blow out sawdust from motor cooling fan |
| | Worn spindle bearings | Replace bearings |
| | Worn motor | Replace motor |
| Excessive vibration | Workpiece warped, out of round, has major flaw, or was improperly prepared for turning | Correct by planning or sawing workpiece, or discard entirely and use new workpiece |
| | Worn spindle bearings | Replace spindle bearings |
| | Worn drive belt | Replace motor |
| | Motor mount lock handle is loose | Tighten lock handle |
| | Lathe on uneven surface | Adjust levelers |
| Tools tend to grab or dig in | Dull tools | Keep tools sharp |
| | Tool support set too far from workpiece | Reposition tool support height |
| | Improper tool being used | Use correct tool for operation being performed |
| Tailstock moves when applying pressure | Cam lock needs adjusting | Tighten cam lock nut |
| | Lathe bed and tailstock mating surfaces are greasy or oily | Remove tailstock and clean surfaces with a cleaner/degreaser. Re-apply light coat of oil to lathe bed surface |

## HEADSTOCK ASSEMBLY

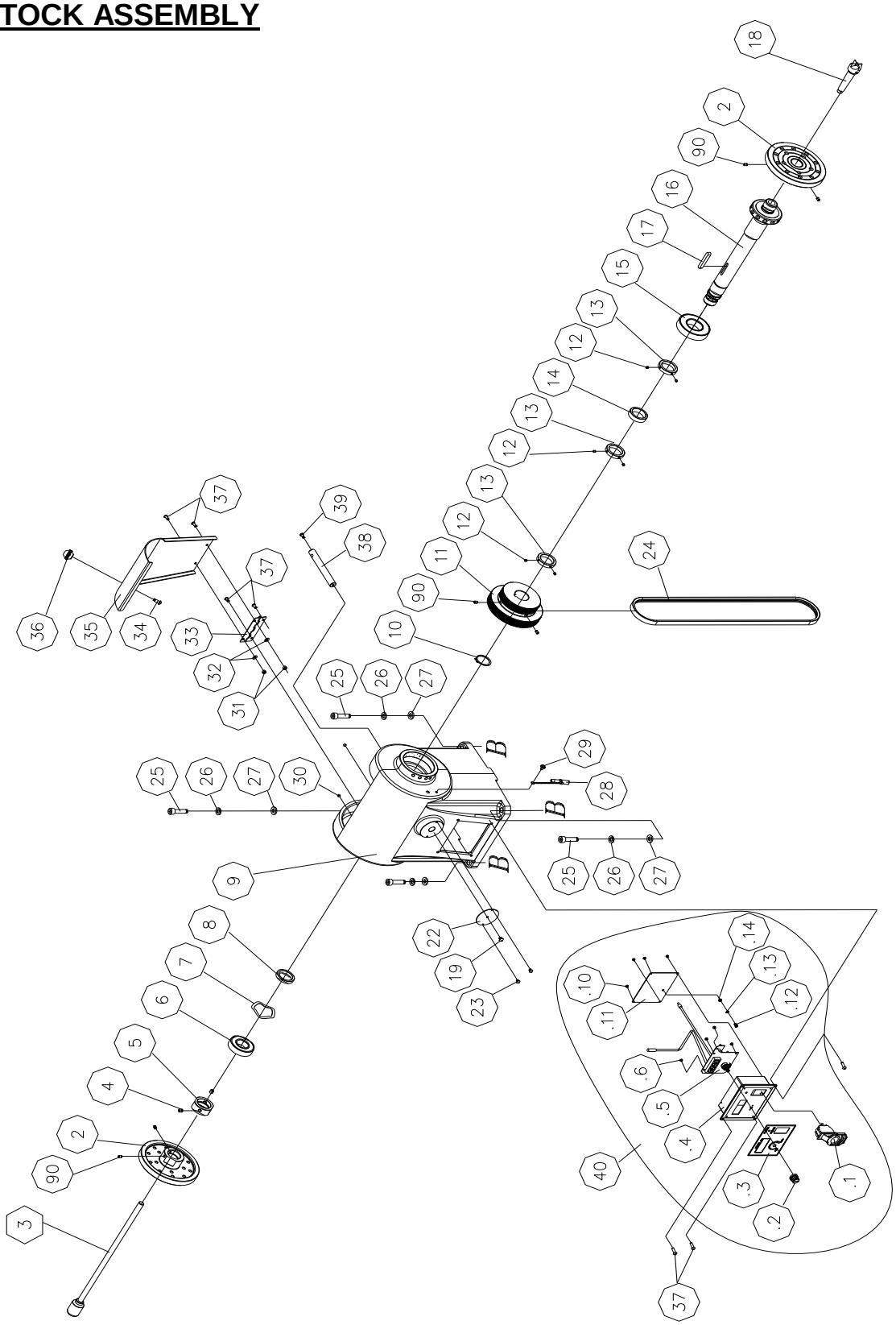

## STAND AND BED ASSEMBLY

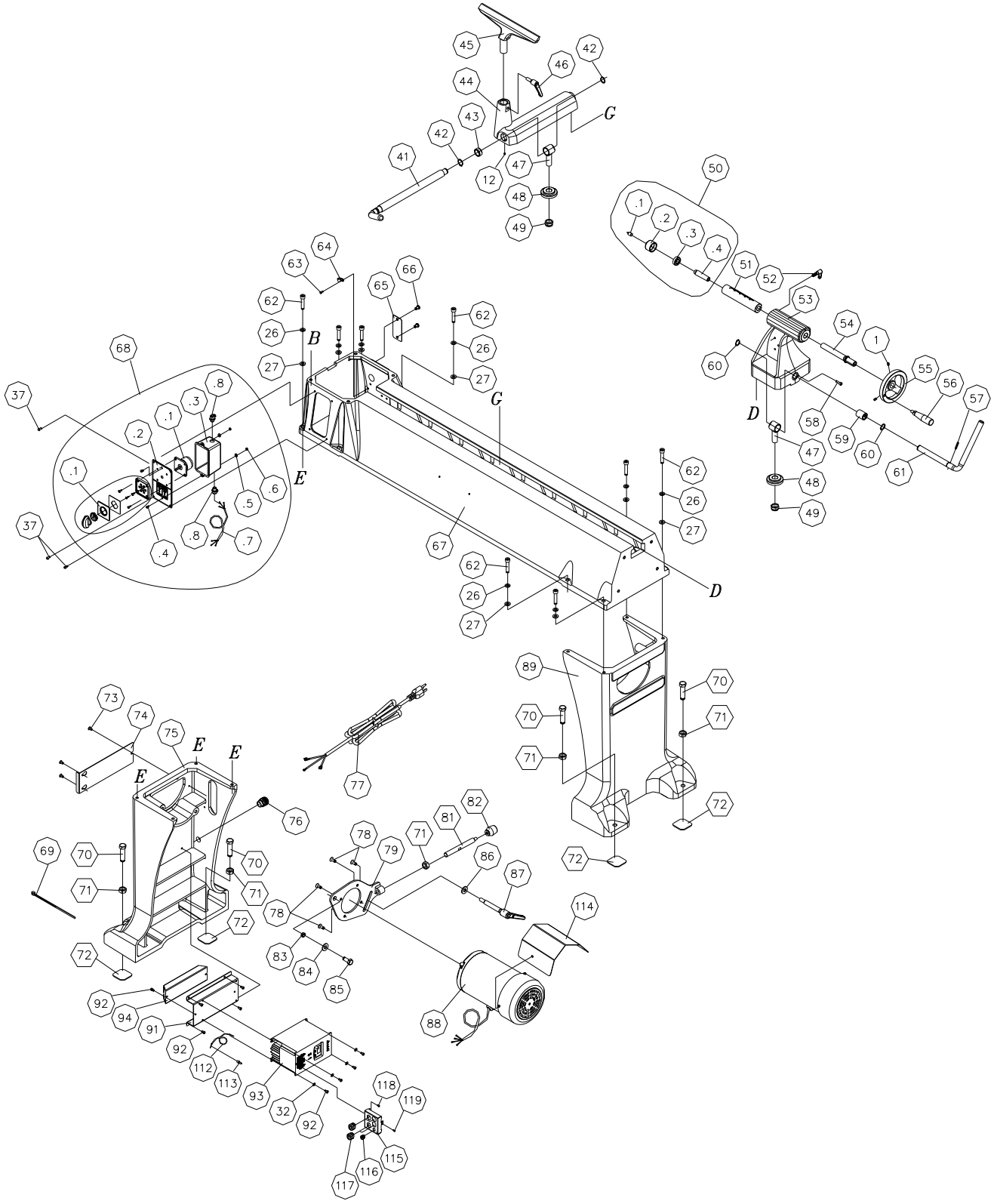

## Parts List

| Item | Description | Specification | Qty. |
|---|---|---|---|
| 1 | Set Screw | M6 x 1.0P x 6 | 2 |
| 2 | Faceplate | | 2 |
| 3 | Spur Center Assembly | | 1 |
| 4 | Set Screw | M8 x 1.25P x 8 | 2 |
| 5 | Nut | M35 x 1.5P | 1 |
| 6 | Ball Bearing | 6007 | 1 |
| 7 | Wave Washer | WW6305 (47.2 x 60.2mm) | 1 |
| 8 | Bushing | | 1 |
| 9 | Shaft Box | | 1 |
| 10 | S-Ring | STW-35 | 1 |
| 11 | Shaft V-Belt | | 1 |
| 12 | Set Screw | M5 x 0.8P x 5mm | 7 |
| 13 | Bushing | | 3 |
| 14 | Sensor Ring | | 1 |
| 15 | Ball Bearing | 6208 | 1 |
| 16 | Shaft | | 1 |
| 17 | Key | 8 x 8 x 40mm | 1 |
| 18 | Spur Center Assembly | | 1 |
| 19 | Round Head Screw | M5 x 0.8P x 6mm | 1 |
| 22 | Cover | | 1 |
| 23 | Round Head Screw | M4 x 0.7P x 6mm | 2 |
| 24 | V-Belt | 540J-8 | 1 |
| 25 | Cap Screw | M10 x 1.5P x 40mm | 4 |
| 26 | Spring Washer | 10.2 x 18.5mm | 12 |
| 27 | Flat Washer | 10 x 20 x 3T | 12 |
| 28 | Knurled Screw Assembly | | 1 |
| 29 | Hex Screw With Washer | M5 x 0.8P x 10/5 x 12 x 0.8T | 1 |
| 30 | Magnet | | 2 |
| 31 | Anti-Loose Nut | M5 x 0.8P (8B x 6H) | 2 |
| 32 | Flat Washer | 5.3 x 12 x 1.0T | 2 |
| 33 | Long Hinge | | 1 |
| 34 | Round Head Screw | 1/4"-20NC x 5/8" | 1 |
| 35 | Cover | | 1 |

| Item | Description | Specification | Qty. |
|---|---|---|---|
| 36 | Knob Plunger | | 1 |
| 37 | Round Head Screw | M5 x 0.8P x 12mm | 12 |
| 38 | Head Rod | | 1 |
| 39 | Round Head Screw | M5 x 0.8P x 10mm | 1 |
| 40 | Digital Display Switch Box Assembly | | 1 |
| 40.1 | Safety Switch | | 1 |
| 40.2 | Handle | | 1 |
| 40.3 | Switch Box Plate | | 1 |
| 40.4 | Digital Display Switch Box | | 1 |
| 40.5 | Digital Display Board | | 1 |
| 40.6 | Power Cord | SJT14AWG x 1C x 100mm | 1 |
| 40.7 | Power Cord | SJT14AWG x 1C x 100mm | 1 |
| 40.8 | Power Cord | SJT14AWG x 3C x 900mm | 1 |
| 40.9 | Power Cord | SJT18AWG x 2C x 300mm | 1 |
| 40.10 | Self-Tapping Screw | M3 x 1.06P x 6mm | 8 |
| 40.11 | Digital Display Cover | | 1 |
| 40.12 | Round Head Screw | M4 x 0.7P x 8m | 1 |
| 40.13 | Tooth Washer | 4.3 x 8.5 (BW-4) | 1 |
| 40.14 | Hex Nut | M4 x 0.7P (7B x 3.2H) | 1 |
| 41 | Turret Lock Rod | | 1 |
| 42 | S-Ring | STW-22 | 2 |
| 43 | Bushing | | 1 |
| 44 | Turret Seat | | 1 |
| 45 | Turret Prop Handle | | 1 |
| 46 | Lock Handle Assembly | 3/8"-16UNC-1"L | 1 |
| 47 | Adjust Rod | | 2 |
| 48 | Lock Washer | | 2 |
| 49 | Anti-Loose Nut | 3/4"-10NC x 17mm | 2 |
| 50 | Tailstock Unit Assembly | | 1 |
| 51.1 | Top Point | | 1 |
| 51.2 | Tailstocks | | 1 |
| 51.3 | Ball Bearing | 6002 | 1 |
| 51.4 | Taper Shank | | 1 |
| 51 | Tailstock Scale Sleeve | | 1 |
| 52 | Lock Screw Assembly | 5/16"-18UNC-20L | 1 |

| Item | Description | Specification | Qty. |
|---|---|---|---|
| 53 | Tailstock | | 1 |
| 54 | Tailstock Screw | | 1 |
| 55 | Hand Wheel | | 1 |
| 56 | Handle | | 1 |
| 57 | Spring Pin | 5 x 25mm | 1 |
| 58 | Cap Screw | M6 x 1.0P x 20m | 1 |
| 59 | Socket | | 1 |
| 60 | S-Ring | STW-19 | 2 |
| 61 | Bolt | | 1 |
| 62 | Cap Screw | M10 x 1.5P x 50mm | 8 |
| 63 | Cap Screw | M4 x 0.7P x 8mm | 1 |
| 64 | Wire Fixed Clips | ACC-3 | 1 |
| 65 | Lathe Bed Cover | | 1 |
| 66 | Round Head Screw | M8 x 1.25P x 12mm | 2 |
| 67 | Lathe Bed | | 1 |
| 68 | Button Switch Assembly | | 1 |
| 68.1 | Forward And Reverse Switch | ZH-HC-1-FR-BB | 1 |
| 68.2 | Button Switch Plate | | 1 |
| 68.3 | Box Switch | | 1 |
| 68.4 | Round Head Screw | M5 x 0.8P x 12mm | 2 |
| 68.5 | Flat Washer | 5.3 x 12 x 1.0T | 2 |
| 68.6 | Hex Nut | M5 x 0.8P (8B x 4H) | 2 |
| 68.7 | Power Cord | SJT18AWG x 3C x 650mm | 1 |
| 68.8 | Wire Protector | 1/2" | 2 |
| 69 | Zip Tie | ALT250M | 1 |
| 70 | Hex Screw | M16 x 2.0P x 60mm | 4 |
| 71 | Hex Nut | M16 x 2.0P (24B x 13H) | 5 |
| 72 | Cover Pad | | 4 |
| 73 | Flat Head Screw | M6 x 1.0P x 12m | 3 |
| 74 | Stand Plate | | 1 |
| 75 | Stand, Left | | 1 |
| 76 | Strain Relief | MG25AS-10B | 1 |
| 77 | Power Cord | SJT 14AWG x 3C x 3110mm | 1 |
| 78 | Socket Hex Screw | M8 x 1.25P x 20mm | 4 |
| 79 | Motor Plate | | 1 |

| Item | Description | Specification | Qty. |
|---|---|---|---|
| 81 | Knob Shaft | | 1 |
| 82 | Knob | | 1 |
| 83 | Bushing | | 1 |
| 84 | Flat Washer | 12.2 x 23 x 2.0T | 1 |
| 85 | Hex Screw | M12 x 1.75 x 30mm | 1 |
| 86 | Flat Washer | 13 x 28 x 3.0T | 1 |
| 87 | Lock Bolt | | 1 |
| 88 | Motor Assembly | 2HP, 220V, 60HZ, 3PH, 4P | 1 |
| 89 | Stand, Right | | 1 |
| 90 | Set Screw | M6 x 1.0P x 12mm | 6 |
| 91 | Inverter Holder | | 1 |
| 92 | Cap Screw | M5 x 0.8P x 8mm | 10 |
| 93 | Inverter | VFD015S21 (1.5KW 230V 1-PH) | 1 |
| 94 | Brake Resistor | BR300W100 (300W100) | 1 |
| 112 | Power Cord | SJT18AWG x 1C x 100mm | 1 |
| 113 | Closed-End Terminal | TM-2 | 1 |
| 114 | Shield, Motor | | 1 |
| 115 | Cord Panel | | 1 |
| 116 | Strain Relief | SB5M-2 | 1 |
| 117 | Strain Relief | SB8R-1 | 4 |
| 118 | Cap Screw | M3 x 0.5P x 6mm | 2 |
| 119 | Cap Screw | M3 x 0.5P x 12mm | 1 |

## NOTES

**BAILEIGH INDUSTRIAL, INC. 1625 DUFEK DRIVE MANITOWOC, WI 54220**
**PHONE: 920. 684. 4990 FAX: 920. 684. 3944**
**WWW.BAILEIGHINDUSTRIAL.COM**

**BAILEIGH INDUSTRIAL, INC. 1455 S. CAMPUS AVENUE ONTARIO, CA 91761**
**PHONE: 920. 684. 4990 FAX: 920. 684. 3944**

**BAILEIGH INDUSTRIAL LTD. UNIT 1 FULLWOOD CLOSE**
**ALDERMANS GREEN INDUSTRIAL ESTATE**
**COVENTRY, CV2 2SS UNITED KINGDOM**
**PHONE: +44 (0)24 7661 9267 FAX: +44 (0)24 7661 9276**
www.baileighindustrial.co.uk

**BAILEIGH INDUSTRIAL GMBH HOFENER STRAßE 64**
**70736 FELLBACH**
**DEUTCHSLAND**
**WWW.BAILEIGHINDUSTRIAL.DE**